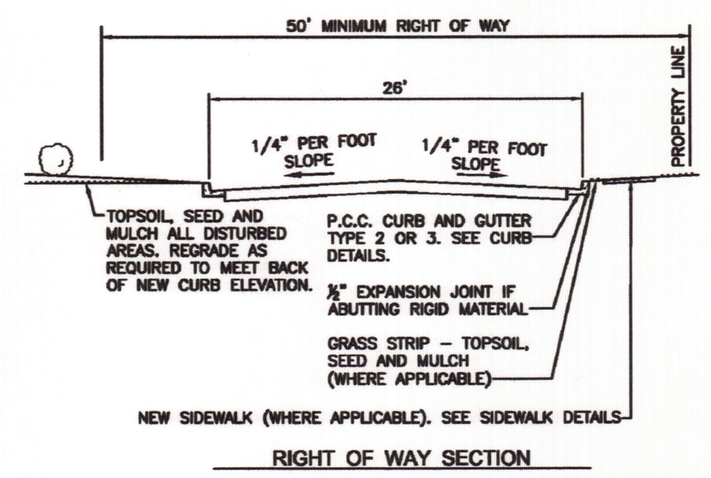

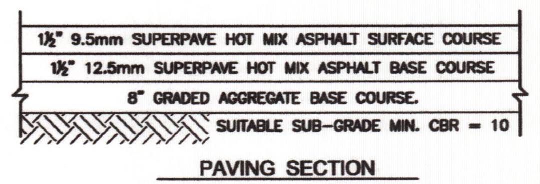

NOTES:

1. BASE & SUB–BASE COURSES TO BE COMPACTED TO MIN. 95% MODIFIED PROCTOR PER ASTM D–1557.
2. SOIL STABILIZATION (SOIL CEMENT), GEOTEXTILES / FABRICS FOR BASE STABILIZATION MAY BE CONSIDERED ONLY AFTER SPECIFIC APPROVAL FROM TOWN OF DENTON DPW.
3. PAVEMENT THICKNESS PER PAVEMENT DESIGN AS APPLICABLE.

TOWN OF DENTON DEPARTMENT OF PUBLIC WORKS	APPROVED BY: Scott W. Getchell PUBLIC WORKS DIRECTOR DATE:	PAVEMENT & CONCRETE DETAILS MINOR STREETS IN SINGLE FAMILY RESIDENTIAL AREAS	REVISED DEC. 2007	SHEET PW–1.10

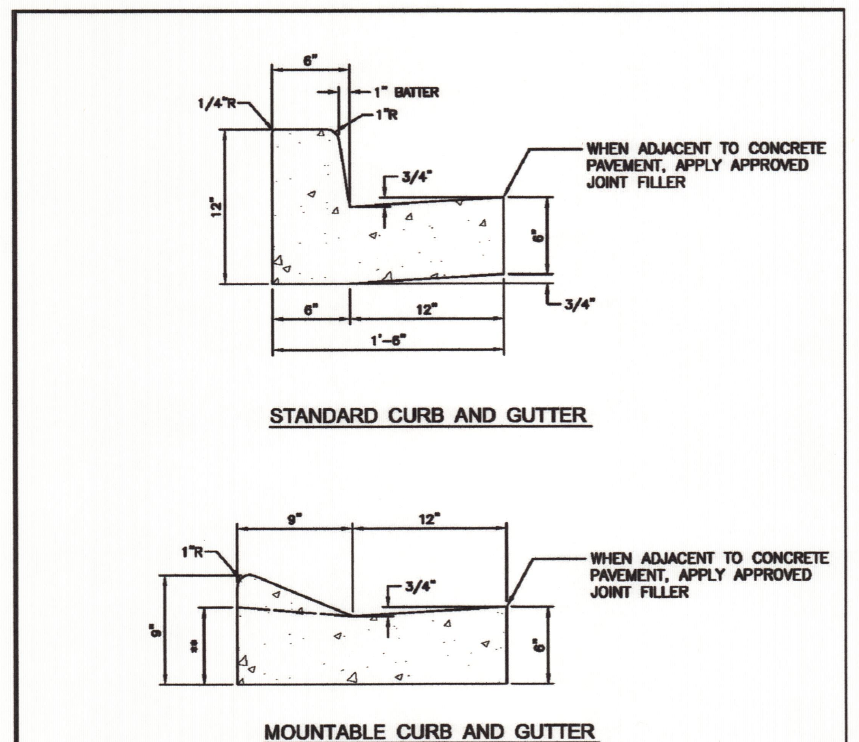

NOTES:

1. CURBING SHALL BE INSTALLED ON MINIMUM 8" GRADED AGGREGATE BASE AND ON SUITABLE SUBGRADE WITH MIN. CBR–10.
2. BASE TO BE COMPACTED TO MINIMUM 95% MODIFIED PROCTOR PER ASTM D–1557.
3. ALL CONCRETE USED FOR CURB AND GUTTER SHALL BE MIX S.H.A. NO. 3.
4. CURB AND GUTTER SHALL HAVE CONTRACTION JOINTS EVERY 10'–0" AND EXPANSION JOINTS EVERY 40'–0". EXTRUDED CONCRETE CURB AND GUTTER SHALL HAVE CONTRACTION JOINTS EVERY 10'–0", AND EXPANSION JOINTS EVERY 100'–0".

** 5. CURB HEIGHT SHALL BE 6" AT HANDICAP RAMPS.

TOWN OF DENTON DEPARTMENT OF PUBLIC WORKS	APPROVED BY: Scott W. Getchell PUBLIC WORKS DIRECTOR DATE:	PAVEMENT & CONCRETE DETAILS COMBINATION CONCRETE CURB & GUTTER	REVISED DEC. 2007 NOV. 2009	SHEET PW–2.00

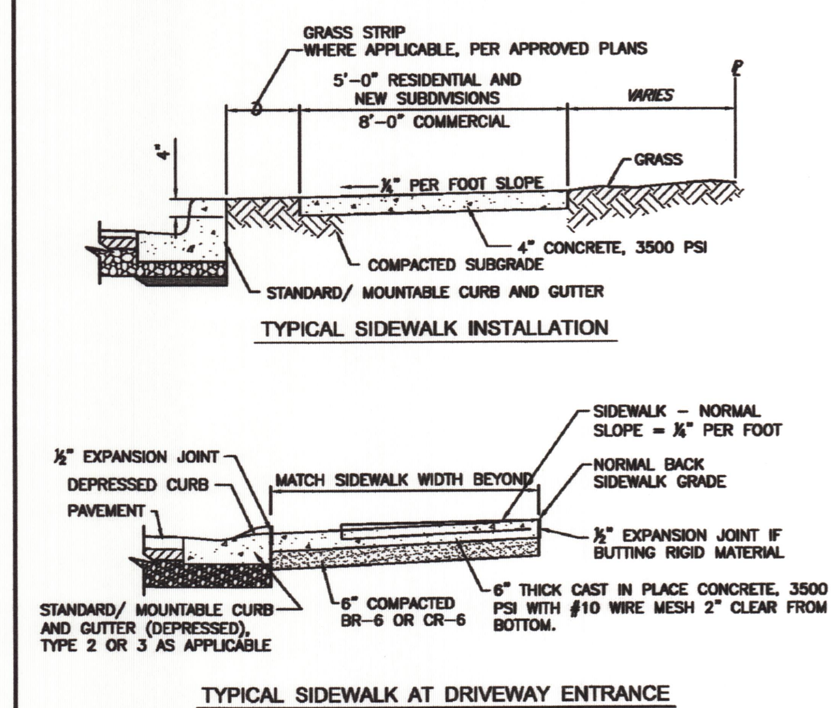

NOTES:

1. CONSTRUCT ½" EXPANSION JOINT WHERE CONCRETE ABUTS RIGID PAVEMENT, CURB AND/OR WALL.
2. TOPSOIL, SEED AND MULCH ALL DISTURBED AREAS. REGRADE AS REQUIRED TO MEET BACK OF CURB ELEVATION.

TOWN OF DENTON DEPARTMENT OF PUBLIC WORKS	APPROVED BY: Scott W. Getchell PUBLIC WORKS DIRECTOR DATE:	PAVEMENT & CONCRTE DETAILS TYPICAL SIDEWALKS	REVISED DEC. 2007	SHEET PW–5.00

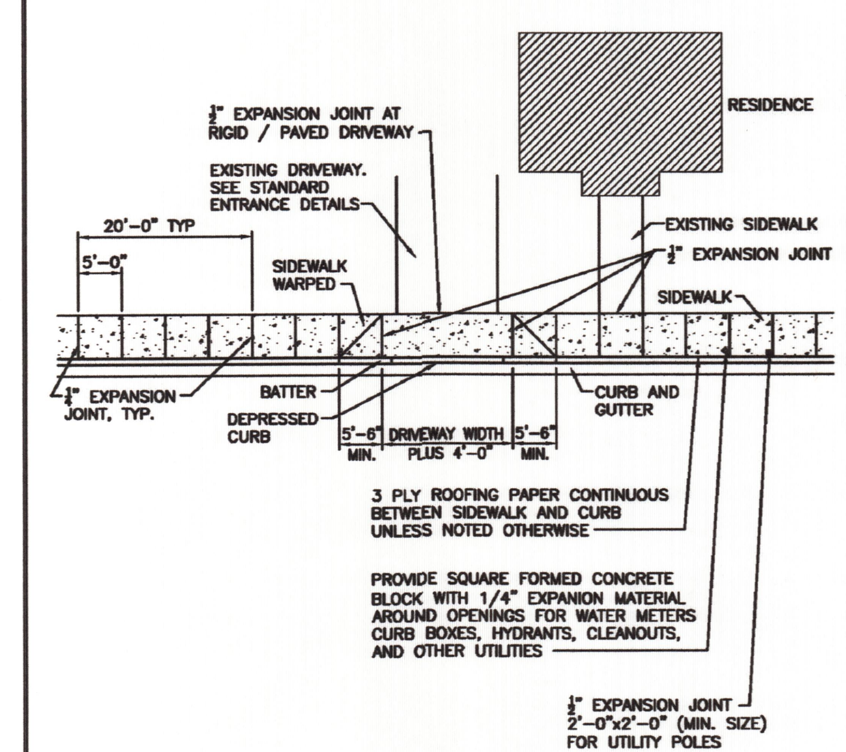

NOTES:

1. CONCRETE SHALL BE 3500 PSI
2. CONTRACTION JOINTS AT 5' INTERVALS
3. ½" THICK, FULL DEPTH EXPANSION JOINTS AT INTERVALS NOT GREATER THAN 20'
4. REFER TO OTHER SIDEWALK AND DRIVEWAY STANDARD DETAILS

TOWN OF DENTON DEPARTMENT OF PUBLIC WORKS	APPROVED BY: Scott W. Getchell PUBLIC WORKS DIRECTOR DATE:	PAVEMENT & CONCRTE DETAILS TYPICAL CURB, GUTTER & SIDEWALK EXPANSION JOINTS	REVISED DEC. 2007	SHEET PW–5.10

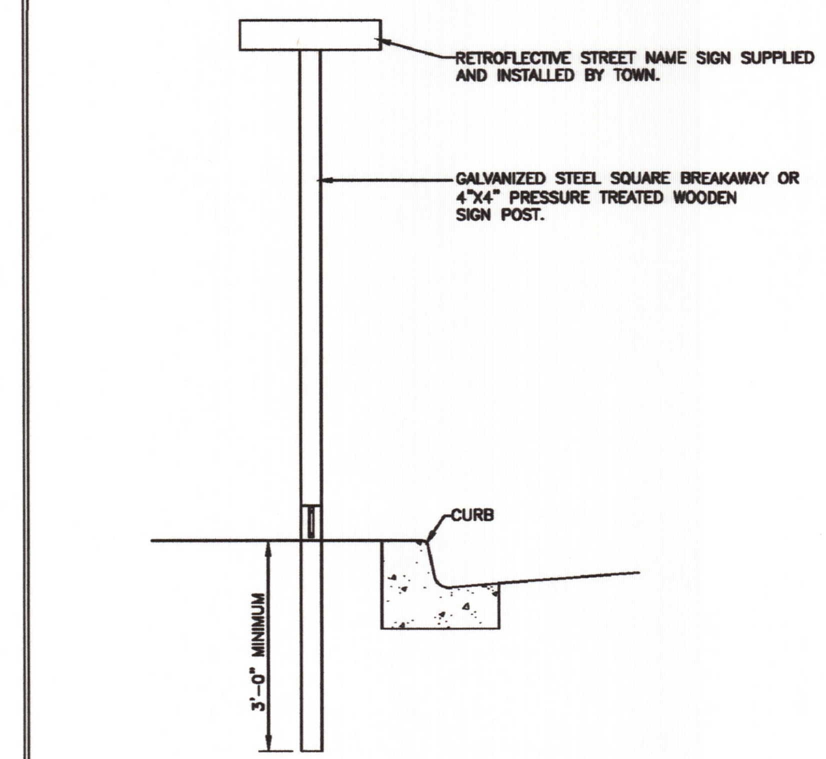

NOTES:

1. SIGN POST SHALL BE MARION STEEL COMPANY "LAP SPLICE BREAKAWAY SYSTEM" MODEL OR AN APPROVED EQUAL.
2. SIGN HEIGHT AND PLACEMENT SHALL BE IN ACCORDANCE WITH THE CURRENT "MANUAL OF UNIFORM TRAFFIC CONTROL DEVICES" (MUTCD).
3. FOR PRIVATE SUBDIVISION / DEVELOPMENT PROJECTS ALL SIGNAGE COSTS BORNE BY DEVELOPER.

TOWN OF DENTON DEPARTMENT OF PUBLIC WORKS	APPROVED BY: Scott W. Getchell PUBLIC WORKS DIRECTOR DATE:	PAVEMENT & CONCRTE DETAILS STREET NAME SIGN	REVISED DEC. 2007	SHEET PW–8.00

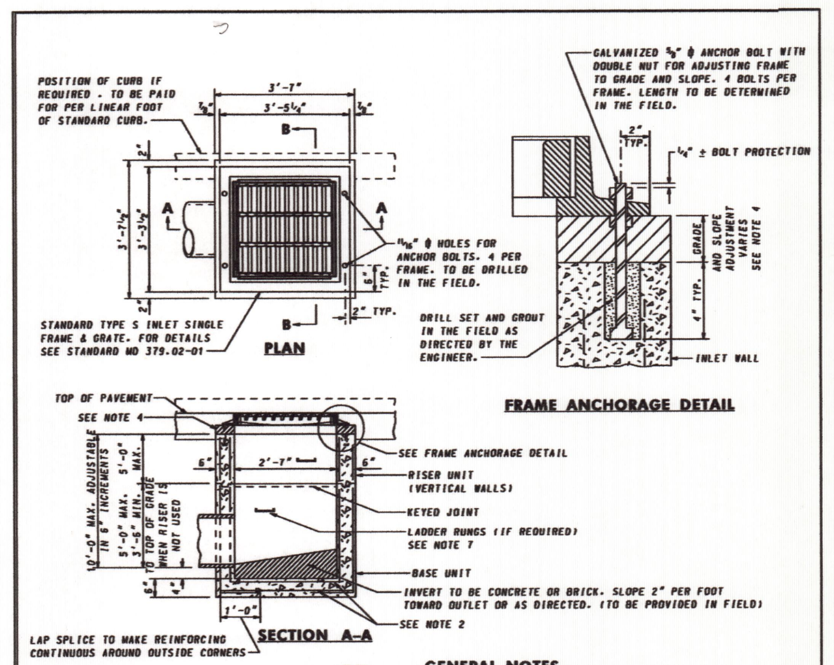

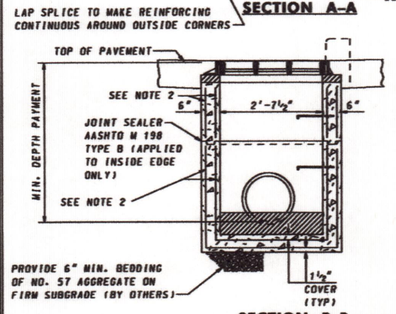

GENERAL NOTES

1. CONCRETE TO BE MIX NO.6 (4500 PSI).
2. REINFORCING WALLS –2 LAYERS OF 4x4–W4.0x W4.0 WELDED WIRE FABRIC; BASE – 2 LAYERS OF 4X4 – W5.0 X W5.0 WELDED WIRE FABRIC
3. THREADED PLASTIC INSERTS TO BE PROVIDED FOR HANDLING.
4. GRADE AND SLOPE ADJUSTMENTS TO BE COMPLETED IN THE FIELD USING CONCRETE MIX NO.6.
5. PIPE OPENINGS TO BE PROVIDED AS REQUIRED. FOR SIZE, LOCATION AND INVERT ELEVATIONS REFER TO CONSTRUCTION PLANS.
6. PLACEMENT OF SUBGRADE DRAINAGE WILL BE AS DIRECTED BY THE ENGINEER OR AS NOTED ON THE CONSTRUCTION PLANS.
7. LADDER RUNGS SHALL BE IN ACCORDANCE WITH STANDARD MD 383.91 AND MD 383.92 OR AS DIRECTED BY THE ENGINEER.
8. MINIMUM DEPTH PAYMENT PER "EACH" INLET INCLUDES DEPTHS UP TO 3'–6". VERTICAL DEPTH PAYMENT PER LINEAR FOOT FOR DEPTHS IN EXCESS OF 3'–6".
9. FROM CURB LINE. INLET HAS BEEN DESIGNED FOR HS–25 LOADING. ACCORDING TO AASHTO LRFD BRIDGE DESIGN SPECIFICATIONS

SPECIFICATION 305	CATEGORY CODE ITEMS	Maryland Department of Transportation STATE HIGHWAY ADMINISTRATION STANDARDS FOR HIGHWAYS AND INCIDENTAL STRUCTURES
APPROVED	DIRECTOR – OFFICE OF HIGHWAY DEVELOPMENT	PRECAST STANDARD TYPE S INLET SINGLE GRATE
APPROVAL • SHA REVISIONS: APPROVAL 4–15–87; REVISED 8–3–10; REVISED 10–7–14; REVISED –	APPROVAL • FEDERAL HIGHWAY ADMINISTRATION: APPROVAL 6–22–87; REVISED 7–26–10; REVISED 9–29–14	STANDARD NO. MD 374.73

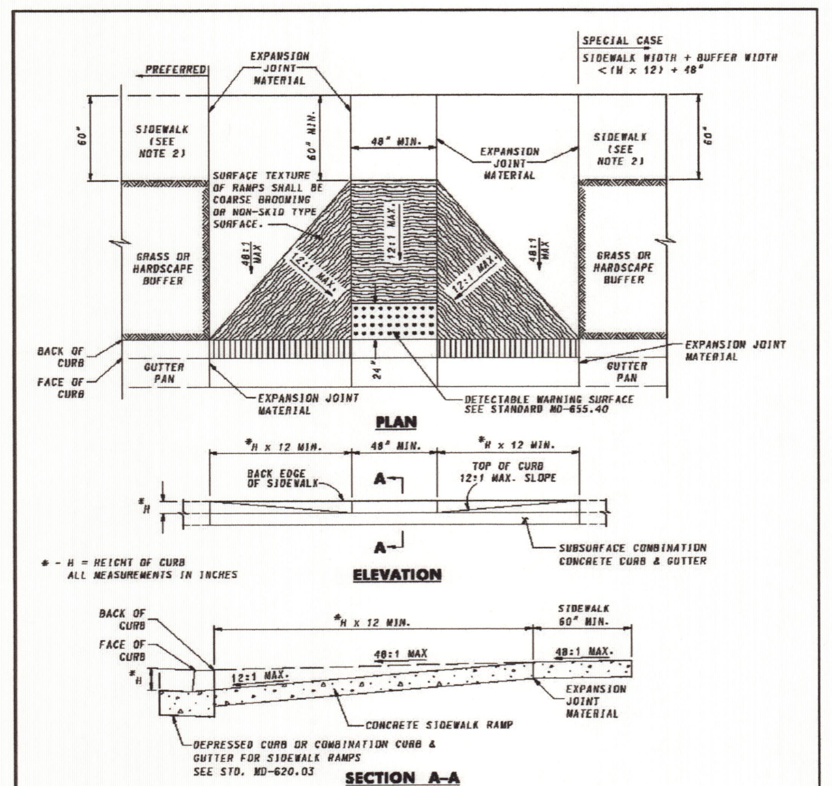

NOTES

1. TO BE USED ON WIDE SIDEWALKS OR SIDEWALKS WITH SIGNIFICANT SEPARATION FROM THE ROADWAY WHERE THE GEOMETRY SPECIFIED IN THE DETAILS ABOVE CAN BE SATISFIED. MAY BE MODIFIED TO SUIT A PARTICULAR LOCATION.
2. WHERE 60" SIDEWALK CAN NOT BE PROVIDED, A DESIGN WAIVER MUST BE REQUESTED
3. NO TRAVERSABLE SLOPE ON THE RAMP OR SIDEWALK SHALL EXCEED 12:1 IN THE DIRECTION OF PEDESTRIAN TRAVEL, OR 48:1 PERPENDICULAR TO THE DIRECTION OF PEDESTRIAN TRAVEL.
4. EXPANSION JOINT MATERIAL SHALL BE INSTALLED IN ACCORDANCE WITH STD. MD–655.01.
5. SIDEWALK RAMPS TO BE SHOWN ON PLANS SYMBOLICALLY AND REFERENCED WITH THE CENTER OF THE RAMP ALIGNED TO A STATION ON THE CONSTRUCTION CENTERLINE. SEPARATE DETAILS SHALL BE SHOWN WHERE PROPOSED RAMP VARIES FROM STANDARD CASES.
6. TRANSITION PANELS TO TIE INTO EXISTING SIDEWALK MUST BE A MINIMUM OF 5' IN LENGTH.

SPECIFICATION 603 & 611	CATEGORY CODE ITEMS	Maryland Department of Transportation STATE HIGHWAY ADMINISTRATION STANDARDS FOR HIGHWAYS AND INCIDENTAL STRUCTURES
APPROVED	DIRECTOR – OFFICE OF HIGHWAY DEVELOPMENT	SIDEWALK RAMPS PERPENDICULAR
APPROVAL • SHA REVISIONS: APPROVAL 2–10–04; REVISED 3–25–08; REVISED 6–2–14; REVISED	APPROVAL • FEDERAL HIGHWAY ADMINISTRATION: APPROVAL 3–31–04; REVISED 4–5–06; REVISED 8–20–14; REVISED	STANDARD NO. MD 655.11

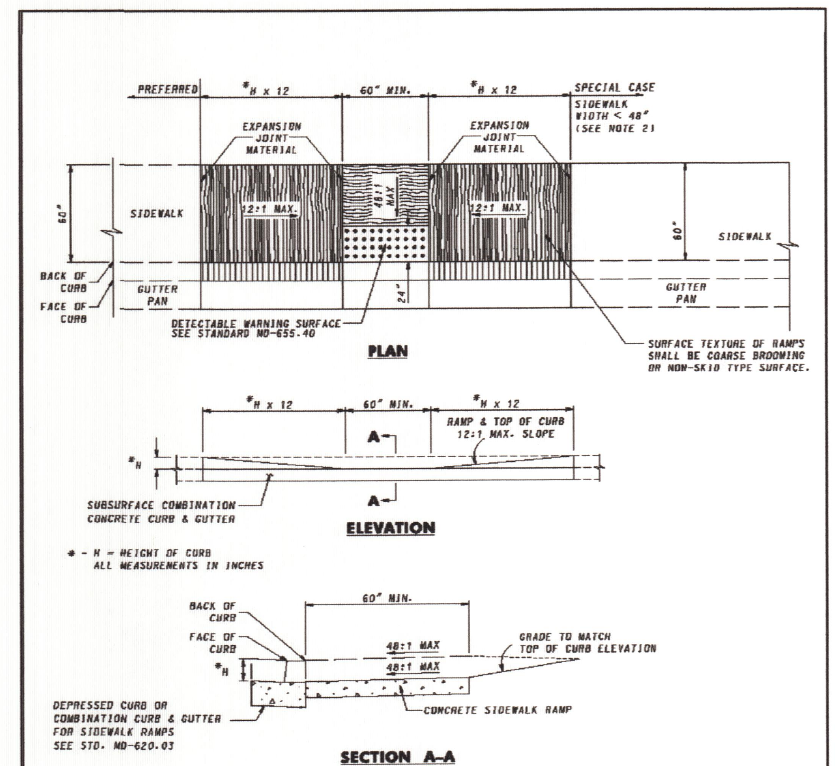

NOTES

1. TO BE USED WHERE SIDEWALK IS ADJACENT TO THE CURB. THIS STANDARD MAY BE MODIFIED TO SUIT A PARTICULAR LOCATION.
2. WHERE 60" SIDEWALK CAN NOT BE PROVIDED, A DESIGN WAIVER MUST BE REQUESTED.
3. NO TRAVERSABLE SLOPE ON THE RAMP OR SIDEWALK SHALL EXCEED 12:1 IN THE DIRECTION OF PEDESTRIAN TRAVEL, OR 48:1 PERPENDICULAR TO THE DIRECTION OF PEDESTRIAN TRAVEL. THE CROSS-SLOPE OF THE LANDING AREA CANNOT EXCEED GRADE OF ROADWAY
4. EXPANSION JOINT MATERIAL SHALL BE INSTALLED IN ACCORDANCE WITH STD. MD–655.01.
5. SIDEWALK RAMPS TO BE SHOWN ON PLANS SYMBOLICALLY AND REFERENCED WITH THE CENTER OF THE RAMP ALIGNED TO A STATION ON THE CONSTRUCTION CENTERLINE. SEPARATE DETAILS SHALL BE SHOWN WHERE PROPOSED RAMP VARIES FROM STANDARD CASES.
6. TRANSITION PANELS TO TIE INTO EXISTING SIDEWALK MUST BE A MINIMUM OF 5' IN LENGTH

SPECIFICATION 603 & 611	CATEGORY CODE ITEMS	Maryland Department of Transportation STATE HIGHWAY ADMINISTRATION STANDARDS FOR HIGHWAYS AND INCIDENTAL STRUCTURES
APPROVED	DIRECTOR – OFFICE OF HIGHWAY DEVELOPMENT	SIDEWALK RAMPS PARALLEL
APPROVAL • SHA REVISIONS: APPROVAL 2–10–04; REVISED 3–25–08; REVISED 6–2–14; REVISED	APPROVAL • FEDERAL HIGHWAY ADMINISTRATION: APPROVAL 3–31–04; REVISED 4–5–06; REVISED 8–20–14; REVISED	STANDARD NO. MD 655.12

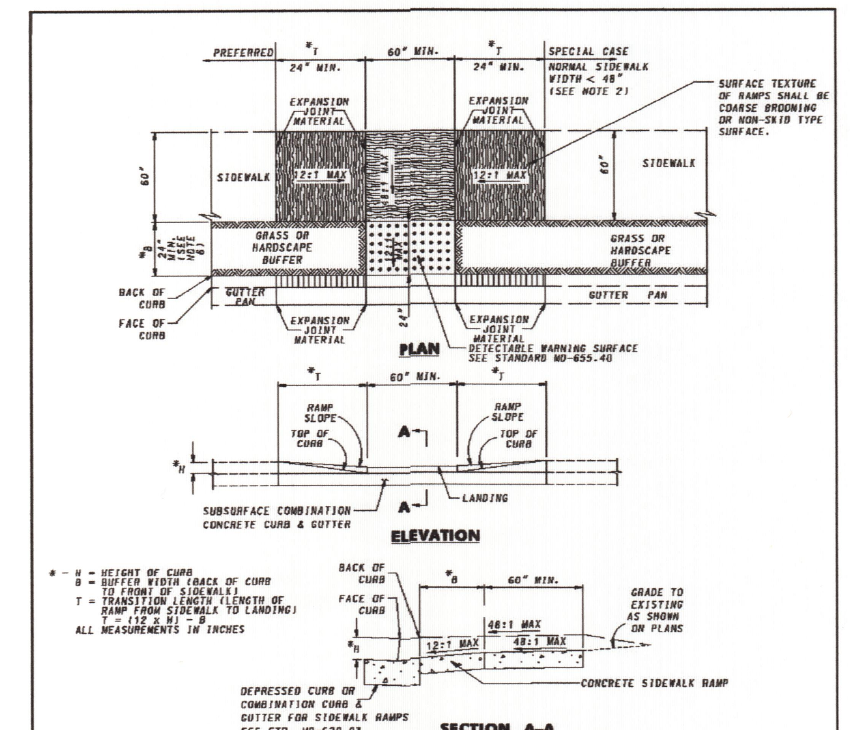

NOTES

1. TO BE USED WHERE AT LEAST 7'–0" EXISTS BETWEEN THE BACK OF CURB AND THE BACK OF SIDEWALK. THIS STANDARD MAY BE MODIFIED TO SUIT A PARTICULAR LOCATION.
2. WHERE 60" SIDEWALK CAN NOT BE PROVIDED, A DESIGN WAIVER MUST BE REQUESTED.
3. NO TRAVERSABLE SLOPE ON THE RAMP OR SIDEWALK SHALL EXCEED 12:1 IN THE DIRECTION OF PEDESTRIAN TRAVEL, OR 48:1 PERPENDICULAR TO THE DIRECTION OF PEDESTRIAN TRAVEL.
4. EXPANSION JOINT MATERIAL SHALL BE INSTALLED IN ACCORDANCE WITH STD. MD–655.01.
5. SIDEWALK RAMPS TO BE SHOWN ON PLANS SYMBOLICALLY AND REFERENCED WITH THE CENTER OF THE RAMP ALIGNED TO A STATION ON THE CONSTRUCTION CENTERLINE. SEPARATE DETAILS SHALL BE SHOWN WHERE PROPOSED RAMP VARIES FROM STANDARD CASES.
6. FOR BUFFER WIDTHS LESS THAN 24", WIDEN SIDEWALK TO BACK OF CURB AS SHOWN FOR THE SPECIAL CASE. THEN BUILD PARALLEL RAMP USING STANDARD MD–655.12.
7. TRANSITION PANELS TO TIE INTO EXISTING SIDEWALK MUST BE A MINIMUM OF 5' IN LENGTH
8. IF THE BUFFER AREA IS GREATER THAN OR EQUAL TO 4' THE LANDING AREA MUST BE 2% X 2%. IF THE BUFFER AREA IS LESS THAN 4' THE LANDING AREA CROSS–SLOPE CANNOT EXCEED THE GRADE OF THE ROAD.

SPECIFICATION 603 & 611	CATEGORY CODE ITEMS	Maryland Department of Transportation STATE HIGHWAY ADMINISTRATION STANDARDS FOR HIGHWAYS AND INCIDENTAL STRUCTURES
APPROVED	DIRECTOR – OFFICE OF HIGHWAY DEVELOPMENT	SIDEWALK RAMPS COMBINATION
APPROVAL • SHA REVISIONS: APPROVAL 2–10–04; REVISED 3–25–08; REVISED 6–2–14; REVISED	APPROVAL • FEDERAL HIGHWAY ADMINISTRATION: APPROVAL 3–31–04; REVISED 4–5–06; REVISED 8–20–14; REVISED	STANDARD NO. MD 655.13

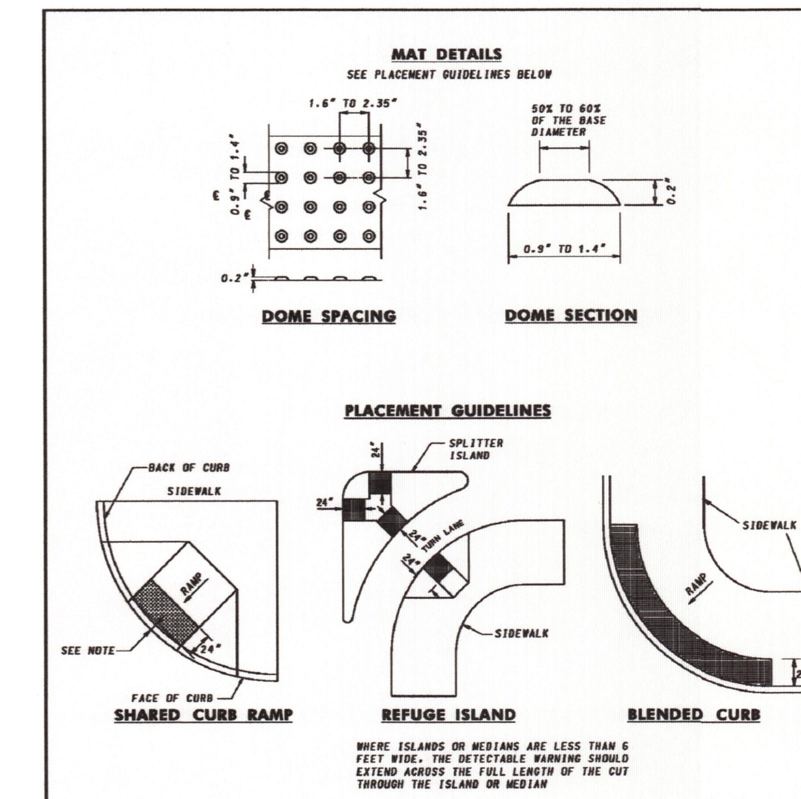

NOTES

1. THE DETECTABLE WARNING SURFACE SHALL BE LOCATED SO THAT THE EDGE NEAREST THE CURB LINE IS 6 TO 8 INCHES FROM THE FACE OF CURB.
2. FOR SKEWED APPLICATIONS DETECTABLE WARNING SHALL BE PLACED SUCH THAT THE DOMES CLOSEST TO THE BACK OF CURB ARE NO LESS THAN 0.5" AND NO MORE THAN 3.0" FROM THE BACK OF CURB. TRUNCATED DOME SURFACES SHALL BE FABRICATED TO PROVIDE FULL DOMES ONLY.
3. DETECTABLE WARNING SURFACE SHALL BE PAID FOR IN ACCORDANCE WITH SECTION 611 OF THE SPECIFICATIONS.
4. DETECTABLE WARNING SURFACES ARE REQUIRED AT STREET CROSSING & SIGNALIZED INTERSECTIONS.

SPECIFICATION 611	CATEGORY CODE ITEMS	Maryland Department of Transportation STATE HIGHWAY ADMINISTRATION STANDARDS FOR HIGHWAYS AND INCIDENTAL STRUCTURES
APPROVED Kirk G. McClelland	DIRECTOR – OFFICE OF HIGHWAY DEVELOPMENT	DETECTABLE WARNING SURFACES
APPROVAL • SHA REVISIONS: APPROVAL 2–10–04; REVISED 3–15–06; REVISED; REVISED	APPROVAL • FEDERAL HIGHWAY ADMINISTRATION: APPROVAL 3–31–04; REVISED 4–5–06; REVISED; REVISED	STANDARD NO. MD 655.40

NO.	REVISION	DATE	BY	CHK. BY

ALL DOCUMENTS PREPARED BY REMINGTON, VERNICK & BEACH ENGINEERS ARE INSTRUMENTS OF SERVICE IN RESPECT OF THE PROJECT. THEY ARE NOT INTENDED OR REPRESENTED TO BE SUITABLE FOR REUSE BY OWNER OR OTHERS ON EXTENSIONS OF THE PROJECT OR ON ANY OTHER PROJECT.

ANY REUSE WITHOUT WRITTEN VERIFICATION OR ADAPTATION BY REMINGTON, VERNICK & BEACH ENGINEERS FOR THE SPECIFIC PURPOSE INTENDED WILL BE AT OWNERS SOLE RISK AND WITHOUT LIABILITY OR LEGAL EXPOSURE TO REMINGTON, VERNICK & BEACH ENGINEERS; AND OWNER SHALL INDEMNIFY AND HOLD HARMLESS REMINGTON, VERNICK & BEACH ENGINEERS FROM ALL CLAIMS, DAMAGES, LOSSES AND EXPENSES ARISING OUT OF OR RESULTING THEREFROM.

SITE DETAILS

THIRD STREET & FOUNTAIN AVEUNE RESURFACING

TOWN OF DENTON – CAROLINE COUNTY – MARYLAND

DATE: 3/19/15

THOMAS F. BEACH PROFESSIONAL ENGINEER LIC. NO. 22780

RV&B REMINGTON, VERNICK & BEACH ENGINEERS
UNIVERSITY OFFICE PLAZA, BELLEVUE BUILDING, 262 CHAPMAN ROAD, SUITE 105, NEWARK, DE. 19702
(302) 266–0212, FAX: (302) 266–6208, WEB SITE ADDRESS: WWW.RVE.COM

SCALE	DATE	DRAWN BY	DSGN. BY	CHK'D. BY	DWG. NO.	SHEET. NO.
NONE	MARCH 2015	B.L.	B.L.	C.F.	MCDNT004	5 OF 5

DWG FILE PATH/NAME
G:\Drafting\Drafting\Maryland\Denton\MCDNT004 – 3RD & FOUNTAIN INTERSECTION\Dwg\MCDNT004 F3MD INTERSECTION PLAN.dwg